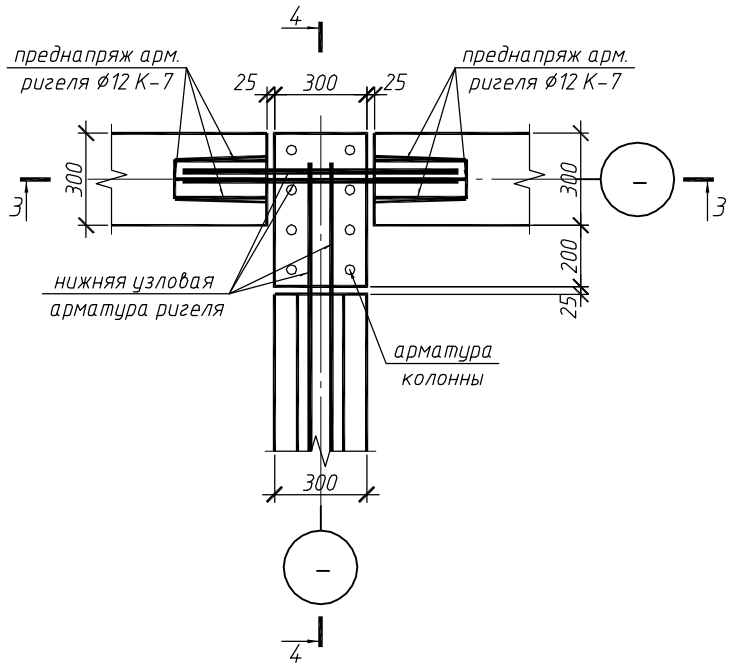

3-3

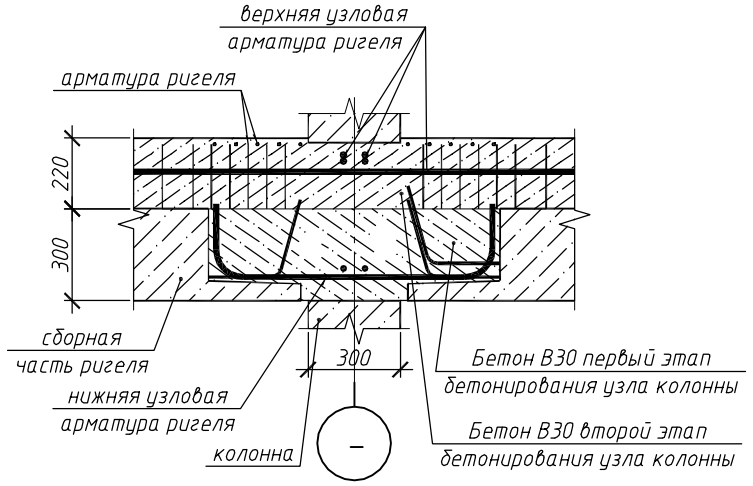

4-4

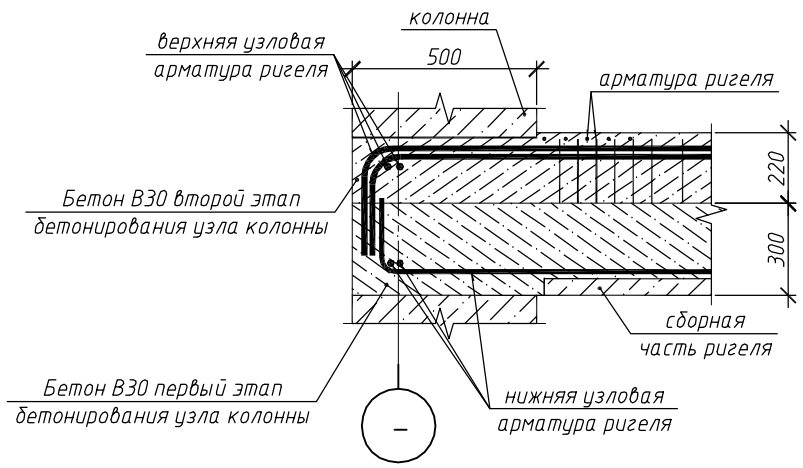

PDF created with pdfFactory Pro trial version www.pdffactory.com